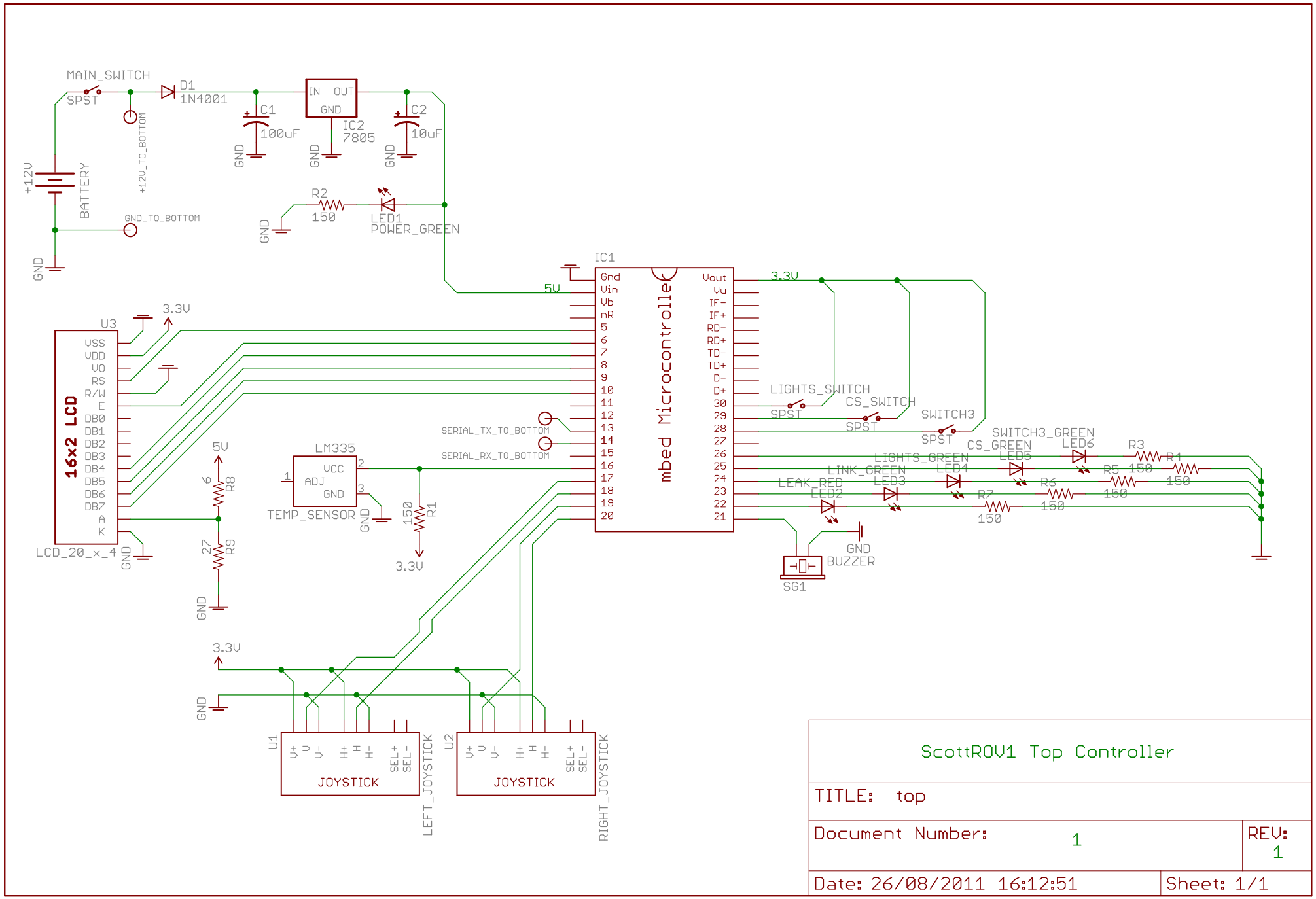

ScottROV1 Top Controller

TITLE: top

Document Number: 1

REV: 1

Date: 26/08/2011 16:12:51

Sheet: 1/1