Mbed Soft PLC I/O Server

PROJECT NUMBER: NXP3782

NXP Mbed Design Challenge 2010
Circuit Cellar • 4 Park St. • Vernon, CT 06066
(860) 875-2199 • Fax: (860) 871-04

C O N T E N T S

1.What Is soft PLCs and when to use it &Why PC Based Automation ?

The PC has an incomparable history of success, and is now unimaginable in many fields of everyday life.
PC know-how is a matter of course nowadays, and PCs have resulted in standards (hardware components, operating systems, HMI (Human Machine Interface), communication etc.) which – as a result of permanently increasing performance accompanied by reduced prices – make them interesting for an increasingly wide range of applications.
In the case of Automation technology, the few PC applications at the beginning – especially for visualization purposes – have now developed into comprehensive applications for complex tasks.
This is basically the result of two aspects.

- PCs offer new possibilities with respect to flexibility, cost reduction and reduction In time-to-market associated with enormous increase in performance
- On the one hand, PC technologies permit new applications within a standardized environment, and, on the other, permit simple interface of such PC-based solutions to the office world.

<u>What is Soft PLC ?</u>

it a PC based program that simulate the operations performed by Hardware PLC CPU (i.e. perform calculation & logical operations) it work on the same concept of plc's scan cycle (Read i/o status , solve logic program , update outputs and so on)
this soft plc programs are only replace the CPU part of the PLC but it needs Input and output cards to interface with the real world signals to be monitored and controlled .
The communication between the input/output cards and the software of the soft PLC is done by utilizing a communication board that have a driver responsible to update the I/O status between the soft PLC and the input/output cards
The driver normally support a common interface protocol (OPC, DDE, etc.) That should be also supported by the soft PLC program.
So the main role of the communication board and it's driver is to transfer data between the physical I/O (that can be Profibus, Modbus, TCP/IP) to the software driver as a piece of software the support interchanging of data between two programs
Famous sofplc producers include (Wonderware "Incontrol", Beckoff Automation "TWIN CAT", Rockwell Automation "Soft PLC5", Siemens "WINAC RTX)
Wonderware In control was used in this product to act the that soft plc side of the project

.2. Advantages of PC-based Automation?

- Combining Operating, Control, Monitoring In One Solution.
- Cost Saving Through Integration.
- Simple communication resulting from integral network ports
- Simple use of business software (e.g. MS Office) and own software(C++/VB..)
- Standardized means better selection
- High investment security
- High system availability

However all that mentioned above need and Industrial PC with A Communication board that interact with the slot PLC and to form A complete control system.

This is a high cost scheme from here arose the Idea of Project to make Mbed Act as communication Board & I/O Card for soft PLC that Support DDE (Dynamic Data Exchange) Connections

3. Project Idea & System Description System Description

A. SIGNALLING & PROTOCOL

Physical Layer : RJ45 Ethernet Communication 10/100 Mbps
Protocol : TCP/IP based Command and Status update (CSU)
Encoding : Control/Status Functions – Special Byte wide set
Driver Protocol : TCP/IP
Soft PLC Protocol: Net DDE suite link

B. PRINCIPLE OF OPERATION

The system is consisting of :-

1. the PC communication Driver
2. The Mbed Firmware.
3. Wonderware Control Soft PLC.

Since any PC- based Automation Systems needs beside the PC a Communication Card & I/O Cards which is very expensive for small automation projects the project eliminates the need for the Communication card and the I/O Cards
By providing a direct connection between the soft PLC and the Mbed through PC software Driver and Simple CAT5 twisted pair network card
This system can be extended through a network switch and small modifications in the PC software driver to allow multiple Mbed units to work as I/O cards for the soft PLC
The Soft PLC update the status of the Output of the mbed via the PC software driver and receive the status of the inputs from the mbed through the PC software Driver as long as there is a connection established between the PC software Driver and the Mbed.

C. ADVANTAGES OF THIS SYSTEM

The technology is a very low cost solution for limited budget automation project it very flexible design and customizable PC automation system, the cost is nothing compared to other professional systems in the market you can connect the outputs to solid state relays or magnetic mechanical relays to activate various actuators You can connect the inputs to various analog and digital sensors you can monitor, operate the process from the same device all that made it is a very suitable choice for limited budget automation system.

D. System Features

1. 16 digital inputs.
2. 10 digital outputs
3. DDE Capable (can be used with any software the can act as s DDE Client).
4. Support Forcing Inputs or outputs through the soft PLC.
5. Displaying the digital inputs & Outputs status

4. Hardware description

The hardware is based on the very strong MBED microcontroller, which is very suitable for industrial application

I. Digital inputs pin out

Input name	Input Port number
Digital Input 1	Pin 5
Digital Input 2	Pin 6
Digital Input 3	Pin 7
Digital Input 4	Pin 8
Digital Input 5	Pin 9
Digital Input 6	Pin 10
Digital Input 7	Pin 11
Digital Input 8	Pin 12
Digital Input 9	Pin 13
Digital Input 10	Pin 14
Digital Input 11	Pin 15
Digital Input 12	Pin 16
Digital Input 13	Pin 17
Digital Input 14	Pin 17
Digital Input 15	Pin 19
Digital Input 16	Pin 20

II. Digital outputs pin out

Input name	Input Port number
Digital Output 1	Pin 30
Digital Output 2	Pin 29
Digital Output 3	Pin 28
Digital Output 4	Pin 27
Digital Output 5	Pin 26
Digital Output 6	Pin 25
Digital Output 7	Pin 24
Digital Output 8	Pin 23
Digital Output 9	Pin 22
Digital Output 10	Pin 21

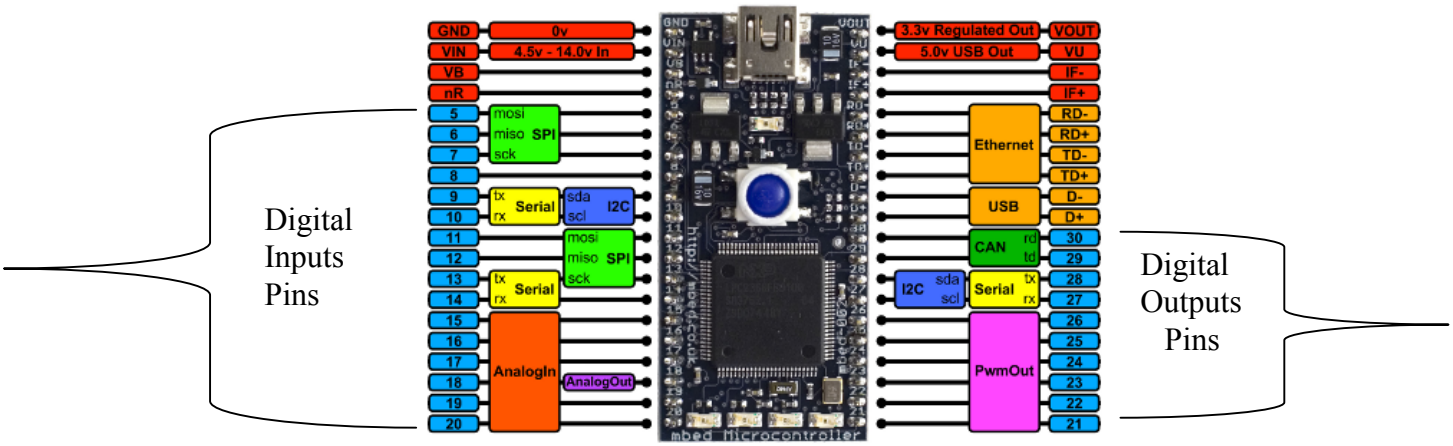

5. Firmware description

The firmware was based on a project on the Mbed library that works as a TCP/IP Echo Server.
The Echo Server should receive a message from the Client and send it back to the same Client
It was modified to receive a message and then send another Different message
What the server receives is the Digital output values of the Mbed then the firmware parse them and update the each Output pin with its corresponding status from the result soft PLC logic operations
Then the firmware collects the status of the digital inputs of the mbed and composes a message containing this data then sends it to the PC software driver

The message of the digital input status is an array of 16 characters that so that ever element in the array is describing the status of an input pin
It contains 1 if it senses high level on the pin or 0 if senses low level on the pin

6. MBED I/O Server PC Software (Win 9x & XP Granted).

The software was written using Borland C++ Builder Version 6 it has one window That shows all the digital input and outputs status as well as the setting for the mbed IP address and Listening socket number
The software is working as a data bridge between the Mbed and The soft PLC software.
It works for the Mbed as a TCP/IP client & works for the soft PLC as A DDE Server that provide the status of the inputs and update the data of the outputs needed to the controlled machine;
It sends the data of the outputs provided by the soft PLC software through DDE connection to the Mbed through TCP/IP and receive the data of the inputs status and then assign the received data to the DDE Conversation items that will be described later

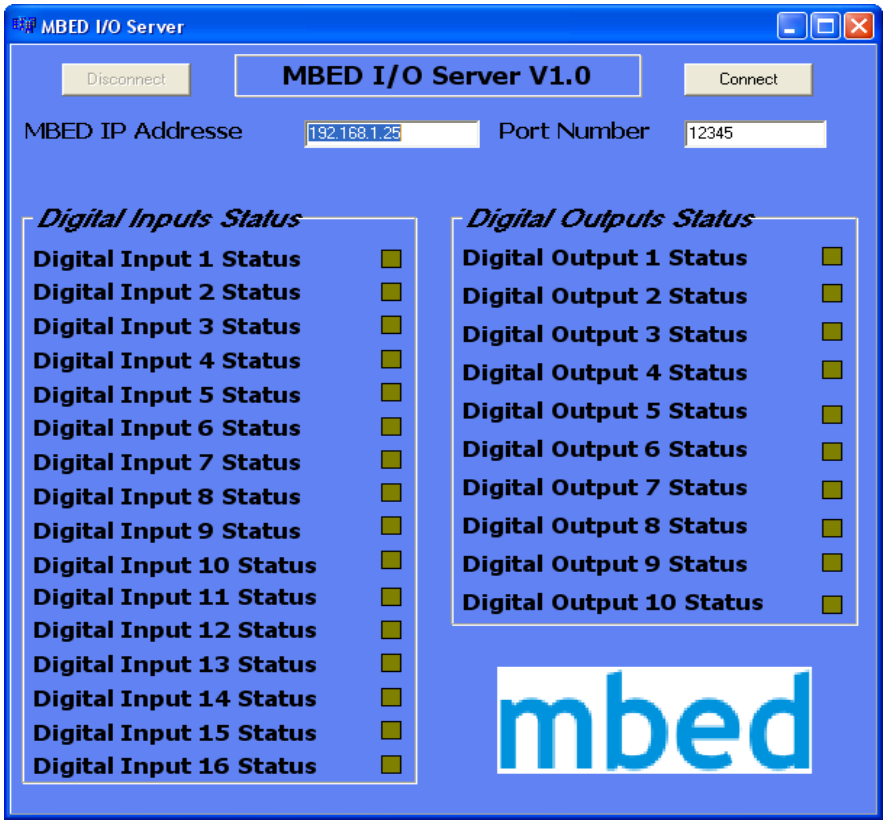

The Software Works as a DDE server (Dynamic Data Exchange Server) that can works with any windows based application that has the ability to Act As DDE Client

To establish a connection With DDE servers the Client Software need some data which is called the Connection Parameters
N.b: (any application can have a single or multiple Topics)

Application Name: - Mbed (The exe name of the application)
Topic Name : - Mbed (The DDE Conversion Server name inside the Application)
Item : - Will be described as on the following table

Digital Output	**Item Name in the DDE Server**
Digital Output 1	DO1
Digital Output 2	DO2
Digital Output 3	DO3
Digital Output 4	DO4
Digital Output 5	DO5
Digital Output 6	DO6
Digital Output 7	DO7
Digital Output 8	DO8
Digital Output 9	DO9
Digital Output 10	DO10

Digital Input	**Item Name in the DDE Server**
Digital Input 1	DI1
Digital Input 2	DI2
Digital Input 3	DI3
Digital Input 4	DI4
Digital Input 5	DI5
Digital Input 6	DI6
Digital Input 7	DI7
Digital Input 8	DI8
Digital Input 9	DI9
Digital Input 10	DI10
Digital Input 11	DI11
Digital Input 12	DI12
Digital Input 13	DI13
Digital Input 14	DI14
Digital Input 15	DI15
Digital Input 16	DI16

N.B:- two Videos were provided to show how to configure the I/O on the Soft PLC as well as making a new Control program using ladder diagram (common method for programming PLCs

In the following part I will explain the function of each part of the program

I. The IP Address And Port Number

In this part you enter the Mbed Microcontroller IP Address and the Socket number (Port Number) and the connect and disconnect buttons used to establish or terminate the connection to the mbed Microcontroller

II. The Inputs and Outputs status part

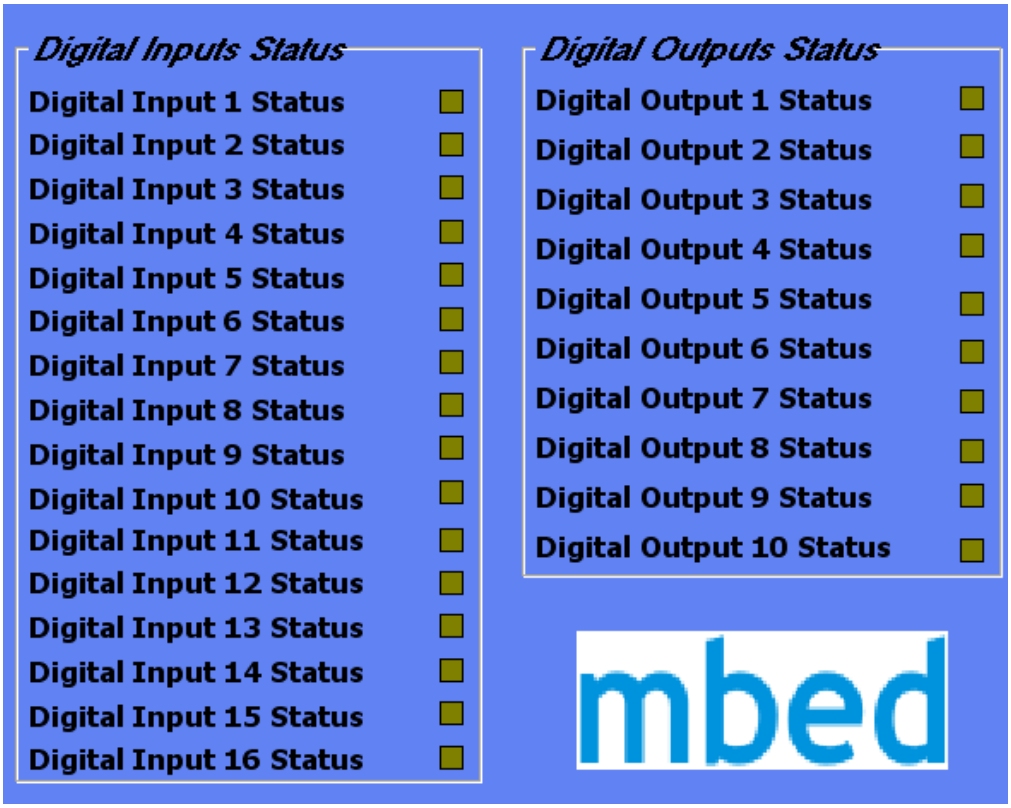

In this part you can monitor the input and output status of the Mbed Microcontroller for quick diagnosis of the singles to track electrical faults
When the signal is active it gives lime color
When the signal is not active it gives olive color
The PC software receives the status of the Outputs from the Soft PLC and composes a message to be sent to the Mbed microcontroller (Array of 10 characters)

7. **Possible Application areas**

- Extending the Automation system based on PC automation with a Cheap I/O Cards
- Training on PLC programming (Cheap Training Toolkit)
- Small Automation systems that has budget constraints
- Home Automation.